ALU axxent PLUS-D

Assembly instructions

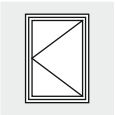

BD3.5

Single sash concealed square turn only

Aluminium eurogroove 15/20

Chamber dimension 21

Versions A0004/A0006/A0022

Hinge clearance (BD) ≥ 3.5

Size range

		Windows	Patio doors
Sash width	(mm)	210 – 1600	210 – 1300
Sash height	(mm)	550 – 2000	2000 – 2400
Sash weight	(kg)	max. 100/130	max. 100/130

The following application diagrams are valid:
-max. 100 kg document Nr.: H58.AWDLS012EN
-max. 130 kg document Nr.: H58.AWDLS014EN

Opening angle:
-≤ 110°

The following documentation is required:
-Profile information ALU20 document Nr.: H45.ALUS001EN
-ALU axxent PLUS-D/DS assembly instructions document Nr.: H39.axntLS002EN
-ALU Maintenance instructions document Nr.: H49.ALUS001EN
-ALU Service instructions document Nr.: H47.ALUS001EN
-ALU Operating instructions document Nr.: H47.ALUS002EN

Please observe:
Guidelines/notes on the product and on liability (VHBH directive as well as the further applicable documents)!
Specifications from the profile manufacturers or system owners for windows and patio doors!

See SIEGENIA download portal for all documentation!

Hardware list
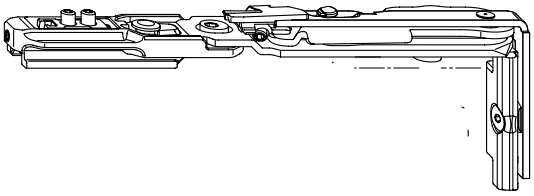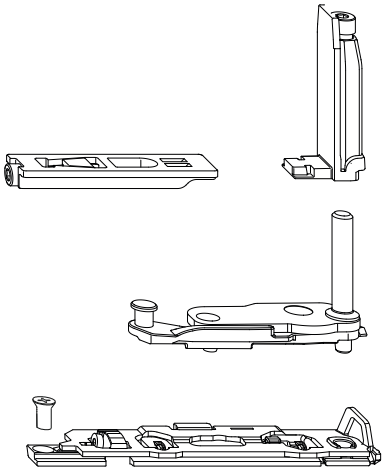
Single sash square turn
Hinge side ALU axxent PLUS